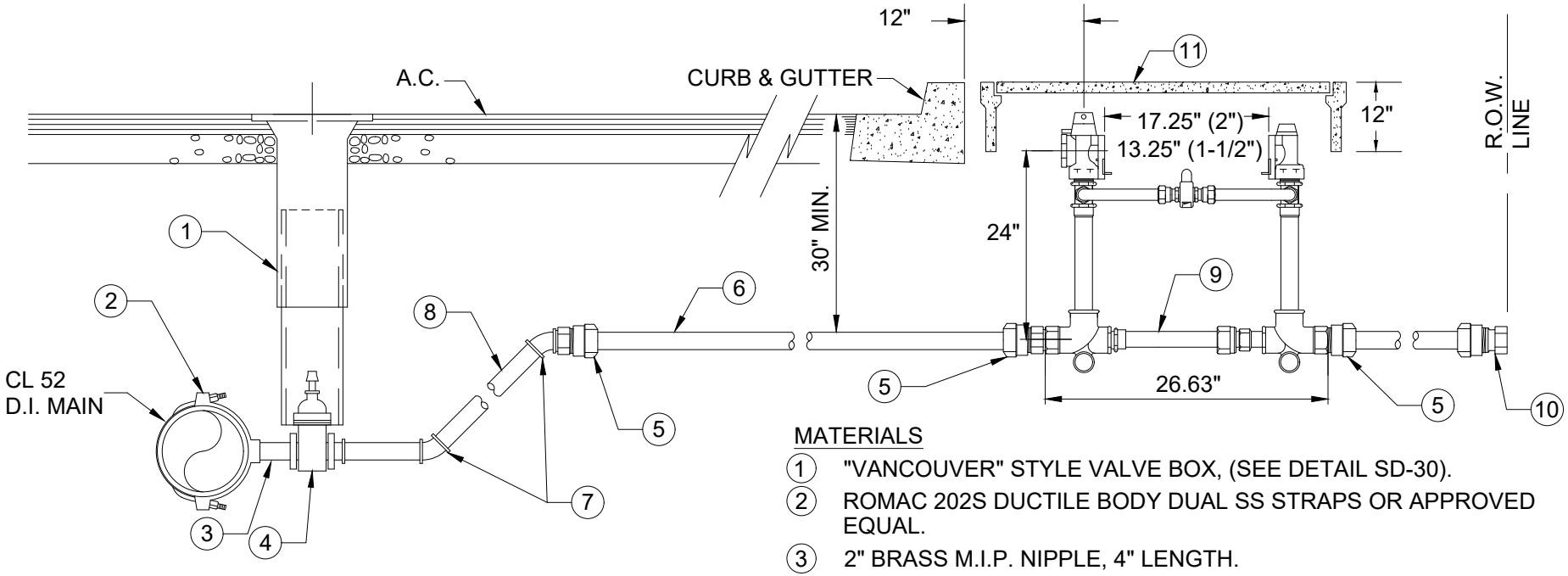

NOTES

1 SUBSTITUTES FOR ANY MATERIALS SHOWN MUST BE APPROVED BY THE DISTRICT.

2 ALL PIPE AND STRUCTURE ZONES SHALL BE BACKFILLED AND COMPACTED PER STANDARD TRENCH DETAIL SD-51.

3 METER BOX SHALL BE CENTERED OVER THE COMPLETED METER AND FITTING ASSEMBLY AND TOP SHALL BE FLUSH WITH SIDEWALK, CURB, OR FINISHED GRADE.

4 CUSTOMER SHALL INSTALL AN APPROVED BACKFLOW PREVENTION ASSEMBLY AT R.O.W.

5 METER SETTER SHALL BE PERPENDICULAR TO CURB LINE.

6 2" METER TAPS TO BE DONE WITH 1-7/8" HOLE SAW USING TAPPING MACHINE.

7 SPECIFIED METER BOXES ARE FOR USE IN SIDEWALKS AND BEHIND CURB APPLICATIONS WHERE NO DELIBERATE VEHICLE TRAFFIC IS PLANNED. METERS PLACED IN DRIVEWAY OR ROLLED CURB APPLICATIONS REQUIRE TRAFFIC RATED BOXES AND COVERS AND REQUIRE PERMISSION FROM THE DISTRICT.

MATERIALS

(1) "VANCOUVER" STYLE VALVE BOX, (SEE DETAIL SD-30).

(2) ROMAC 202S DUCTILE BODY DUAL SS STRAPS OR APPROVED EQUAL.

(3) 2" BRASS M.I.P. NIPPLE, 4" LENGTH.

(4) 2" F.I.P. GATE VALVE (MUELLER NO. A-2360-8 OR APPROVED EQUAL).

(5) 2" M.I.P. x MUELLER 110 COMPRESSION COUPLING (NO. H-15428N) OR APPROVED EQUAL.

(6) 2" ASTM B88 TYPE "K" RIGID COPPER TUBING.

(7) 2" STRAIGHT 45° BEND, BRASS (NON-LEAD,) OR APPROVED EQUAL.

(8) LENGTH CAN BE MADE WITH COMPRESSION FITTINGS AND 2" ASTM B88 TYPE "K" RIGID COPPER TUBING OR 2" BRASS M.I.P. NIPPLE.

(9) 2" METER YOKE (SETTER) (FORD NO. VBB76-24B-11-66 (1-1/2"), FORD NO. VBB77-24B-11-77 (2")), OR APPROVED EQUAL.

(10) END AT ROW WITH 2" F.I.P x MUELLER 110 COMPRESSION COUPLING (NO. H-15451N) OR APPROVED EQUAL.

(11) METER BOXES PLACED IN PLANTER STRIP SHALL BE BROOKS 66MB (BODY) WITH BROOKS 66S (COVER) AND BROOKS 66ST (LID). METER BOXES PLACED IN CONCRETE SHALL BE CHRISTY N36 (BODY) WITH FIBRELYTE FL36 (COVER) OR DFW 1730CNP4-18-BODY WITH DFW 1730C-4M-LID.

Rockwood Water
People's Utility District

1-1/2" & 2" STANDARD SERVICE

ROCKWOOD WATER PEOPLE'S UTILITY DISTRICT

19601 NE HALSEY ST., PORTLAND, OR 97230-7489, OFFICE: (503) 665-4179, FAX: (503) 667-5108

DRAWN BY:	J. HANSON
DATE:	DECEMBER 18, 2019
SCALE: N.T.S.	DWG NO: SD-27